Proportional directional valve
- **pilot operated**
- **not pressure compensated**
- **Q_{max} = 220 l/min**
- **Q_N = 80 l/min**
- **p_{max} = 315 bar**

NG10
ISO 4401-05

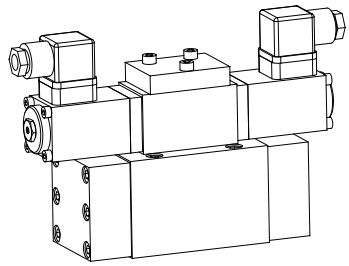

DESCRIPTION
Pilot controlled spool valve, in five chamber design actuated by a Wandfluh proportional solenoid (VDE standard 0580). Wet solenoid in oil. Spool with precisely machined notches on control edges produce a progressive volume flow characteristic similar to proportional flow valves. The valve body, the covers and the solenoids are zinc coated.

FUNCTION
Depending on selected spool, the valve controls flow symmetrically or in meter-in or in meter-out mode. The spool is piloted by a proportional pressure relief valve. Set-up, function and interaction of main and pilot stage are shown with the hydraulic diagram. To control the valve Wandfluh proportional amplifiers are available (see register 1.13).

APPLICATION
High flow capacity and stiffness of the pilot system make this valve on ideal device for fast acceleration and deceleration, high speed, and sensitive adjustment of motion of an actuator. Application: Tooling machines, lifting and haulage systems, textile and plactic industry, mobile applications.

Do not use anymore for new applications!
«Replacement by 1.10-3500»

TYPE CODE

A V 5 W [ ] - 80 - [ ] - [ ] # [ ]

- International mounting interface ISO
- Spool valve, pilot operated, proportional
- Description of symbols acc. to table
- Nominal flow rate Q_N 80 l/min
- Pilot pressure supply and drain
  - Pressure supply (x) and drain (y) internal: ti
  - Pressure supply (x) and drain (y) external: te
  - Pressure supply (x) internal drain (y) external: pi
  - Pressure supply (x) external drain (y) internal: pe
- Nominal voltage U_N
  - 12 VDC: G12
  - 24 VDC: G24
- Design-Index (Subject to change)

GENERAL SPECIFICATIONS

Nominal size	NG10 acc. to ISO 4401-05
Designation	4/2-, 4/3-way proportional-control valve
Construction	Pilot operated spool valve
Mounting	Flange, 4 fixing holes for socket head cap screws M6 x 65
Fastening torque	M_D = 9,5 Nm (screw quality 8.8)
Pipe connection	Connection plates, Multi-station flange subplate, Longitudinal stacking system
Mounting position	any, preferably horizontal
Ambient temperature	-20…+50 °C
Weight: 4/2-way	m = 4,9 kg
4/3-way	m = 5,3 kg

HYDRAULIC SPECIFICATIONS

Fluid	Mineral oil, other fluid on request
Contamination efficiency	ISO 4406:1999, class 18/16/13 (Required filtration grade ß 6…10≥75) refer to data sheet 1.0-50/2
Viscosity range	12 mm²/s…320 mm²/s
Fluid temperature	-20…+70 °C
Working pressure	p_{max} = 315 bar (connection P, A, B)
Tank pressure in T	p_{max} = 160 bar (te,pi) p_{max} = 5 bar (ti,pe)
Nominal volume flow	Q_N = 80 l/min (Q_{max} = 220 l/min) at 10 bar pressure drop over 2 metering edges
Pilot pressure	p_V = 25…315 bar
Leakage volume flow	on request
Hysteresis	≤ 5 % *

* by optimal dithersignal

ELECTRICAL SPECIFICATIONS

Construction	Proportional solenoid, wet pin push type, pressure tight.	
Standard-Nominal voltage	U = 12 VDC	U = 24 VDC
Limiting current	I_G = 1250 mA	I_G = 680 mA
Relative duty factor	100 % DF (see data sheet 1.1-430)	
Protection class	IP 65 acc. to EN 60 529	
Connection / Power supply	Over device plug connection to ISO 4400 / DIN 43650 (2P+E)	

Other electrical specifications see data sheet 1.1-116 (PI35V-M40)

CONTROL MODE

Symmetrical	S	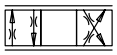
Meter-in	V	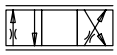
Meter-out	R	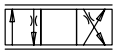

TYPE CHARTS / DESIGNATIONS OF SYMBOLS

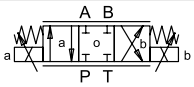	S V 4D101 R
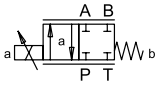	S V 4Z101a R
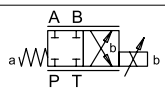	S V 4Z101b R
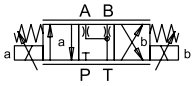	V 4D102
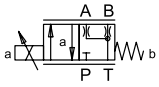	V 4Z102a
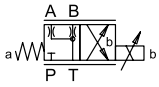	V 4Z102b

CHARACTERISTICS oil viscosity υ = 30 mm²/s

Δp = f (Q) Pressure loss/flow-characteristic over 2 metering edges

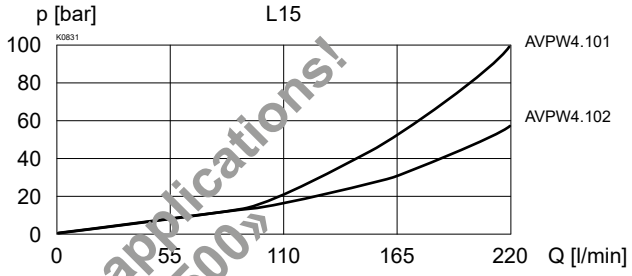

Q = f (I) Volume flow-signal-characteristics

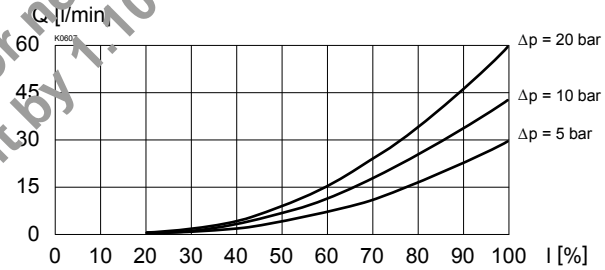

Do not use anymore for new applications!
«Replacement by 1.10-3500»

DIMENSIONS

4/3-way valve

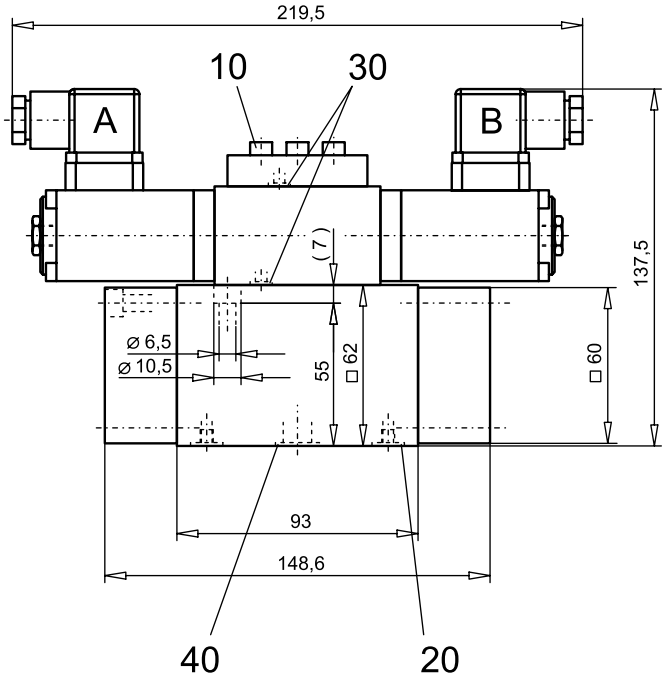

HYDRAULIC DIAGRAM

4/3-way valve

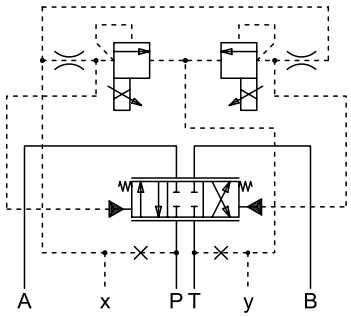

4/2-way valve

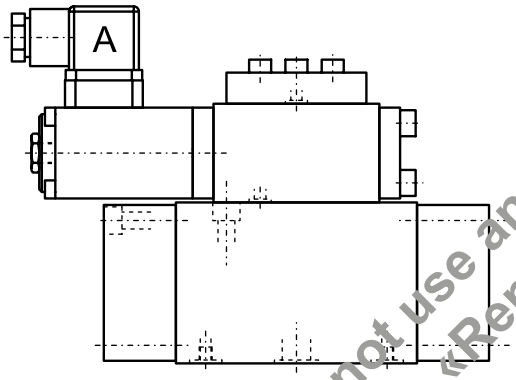

4/2-way valve

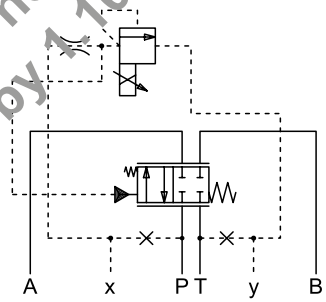

Do not use anymore for new applications!
«Replacement by 1.10-3500»

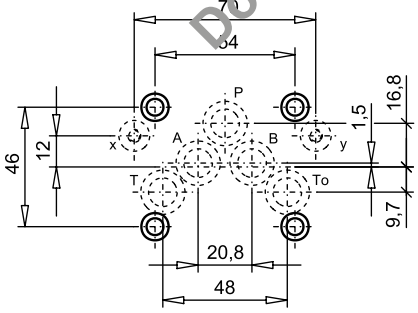

PARTS LIST

Position	Article	Description
10	246.2156	Cyl. screw M5x55 DIN 912
20	160.2093	O-ring ID 9,25x1,78
30	160.2052	O-ring ID 5,28x1,78
40	160.2140	O-ring ID 14,00x1,78

Mounting instruction

To screw the main valve body (M_D = 9,5 Nm, quality 8.8) to the base plate the pilot valve (M_D = 5,5 Nm, quality 8.8). must be taken off.

ACCESSORIES

Sub-plates	Register 2.9
Proportional-amplifier	Register 1.13

Technical explanation see data sheet 1.0-100